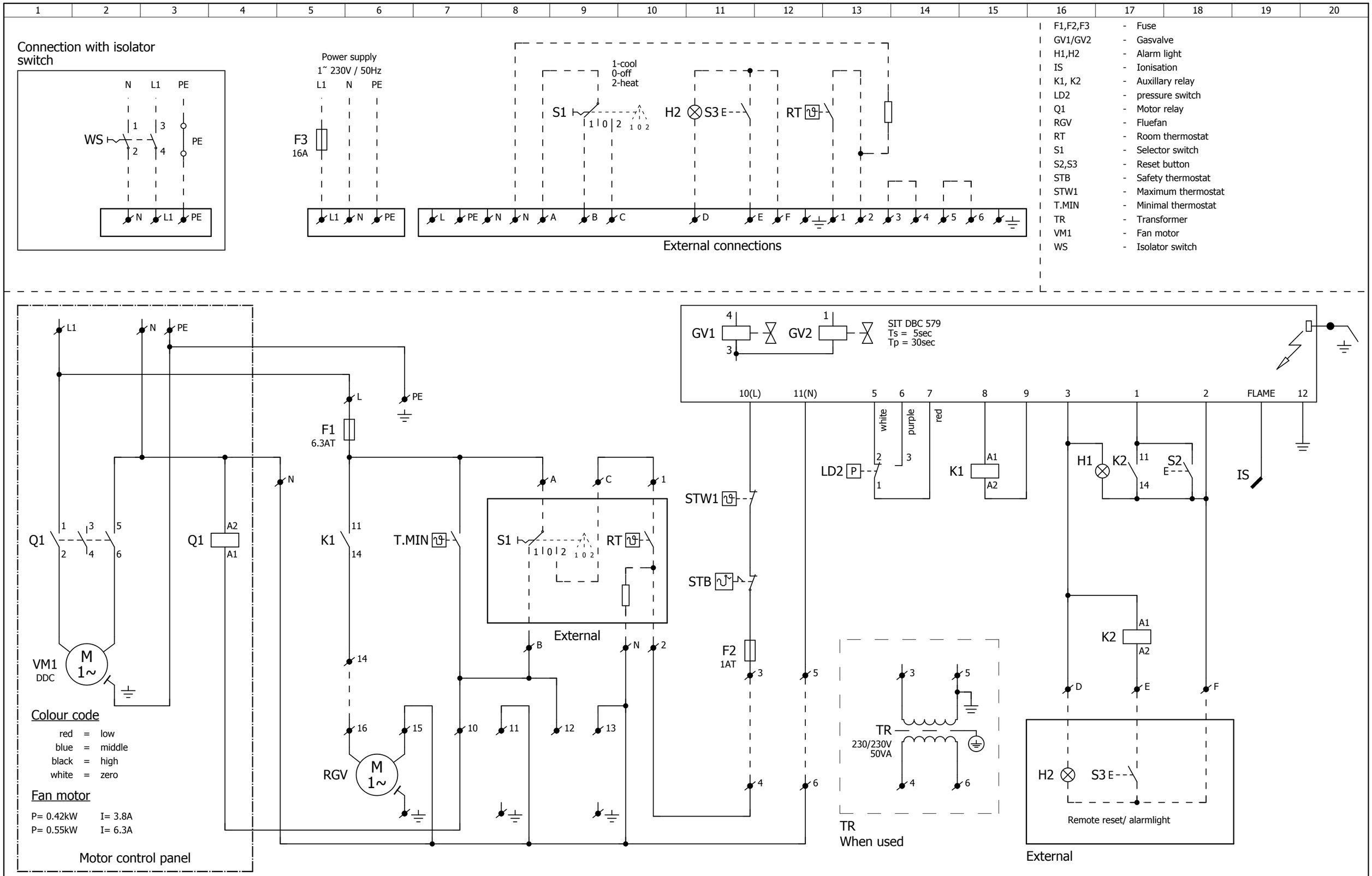


| | | | | | | | |
|---|---|---|---|---|---|---|---|
| mark climate technology | G(N)CE | | | Drawing number | WLV-012000-EN | | |
| | | Get. | J.W. | Date | 18-1-2011 | Group | G(N)CE | Type | |
| | | Gec. | | Norm | | Art.nr. | | Version | 1.2 |

1